LEVELe® ELEVATOR INTERIORS

INSTALLATION INSTRUCTIONS

INCLUDED

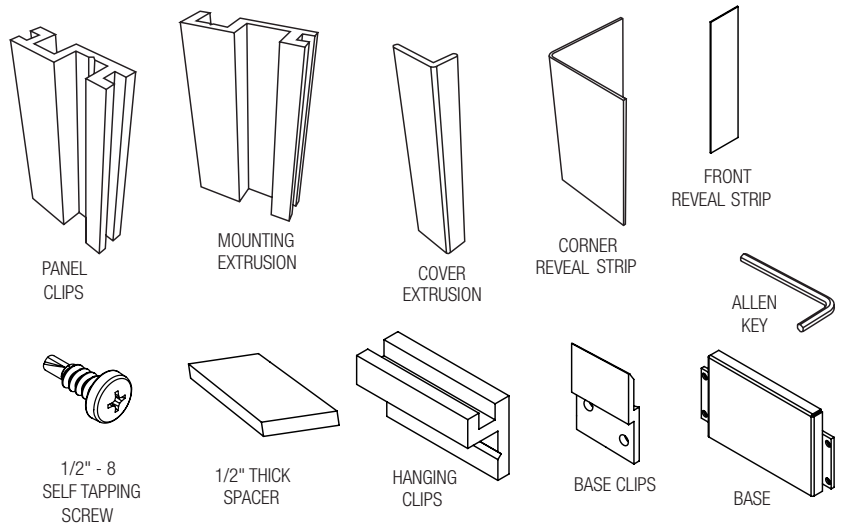

TOOLS NEEDED

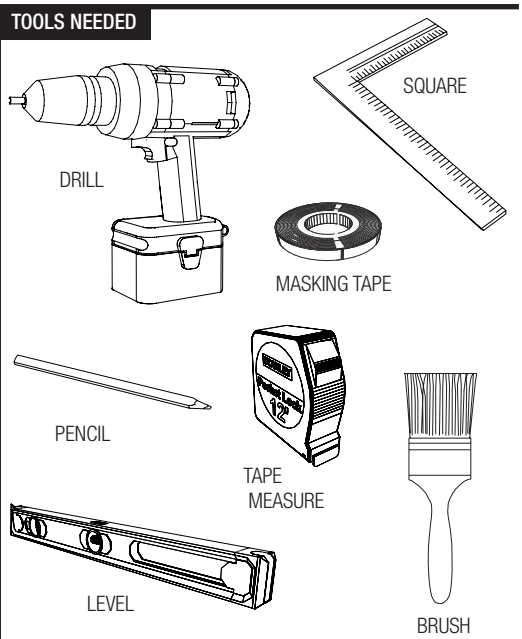

STEP BY STEP

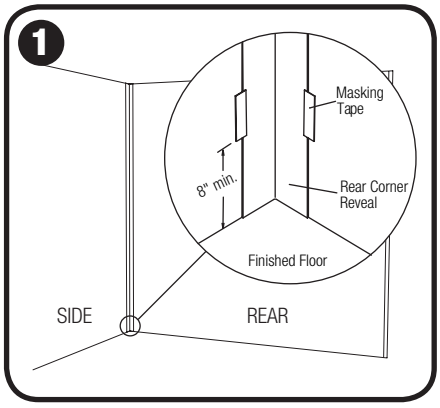

Install (2) Corner Reveals.

Position Corner Reveals and hold them in place with masking tape. Cover no more than 1/8" of the reveal with tape.

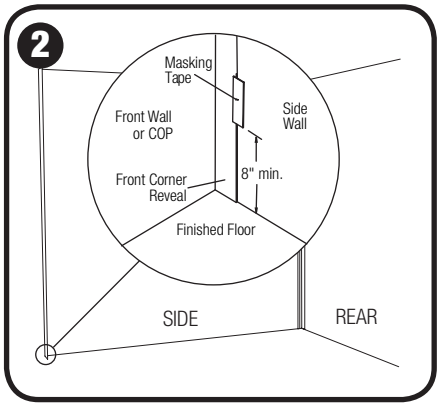

Install (2) Front Reveals.

Position Front Reveals and install using same steps as used to install Corner Reveals, while covering no more than 1/8" of the reveal with tape. Note: Detail is inside view of front corner.

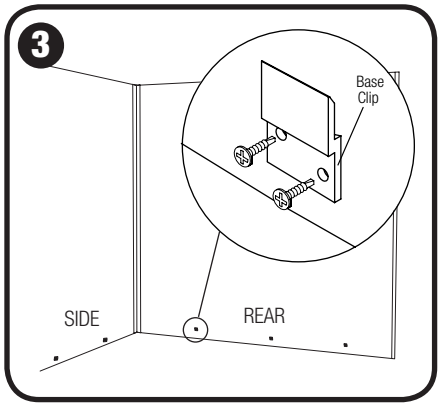

Install Base Clips.

Bases have clips to secure the center. Use the actual base to determine the horizontal spacing of clips. Space clip 1/2" above finished floor using 1/2" spacer provided. Attach clips using the provided self-drilling screws. Test fit the base.

T 1.800.451.0410 | F 412.781.7840 | www.forms-surfaces.com

FORMS+SURFACES®

© 2012 Forms+Surfaces® | All dimensions are nominal. Specifications and pricing subject to change without notice. For the most current version of this document, please refer to our website at www.forms-surfaces.com.

LEVELe® ELEVATOR INTERIORS

INSTALLATION INSTRUCTIONS

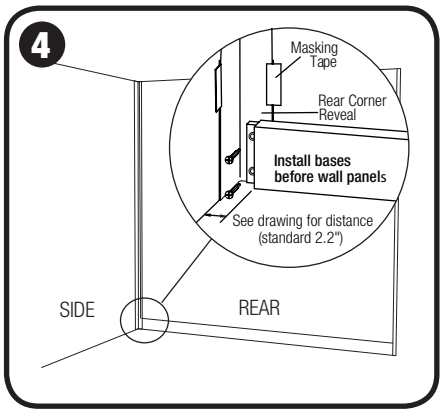

Install Base.

Put a small amount of construction cement on the base clips and attach bases 2.2" from the rear corners with provided self-drilling screws. Install (2) remaining bases using same steps on side walls. **Bases must be level for an accurate installation.**

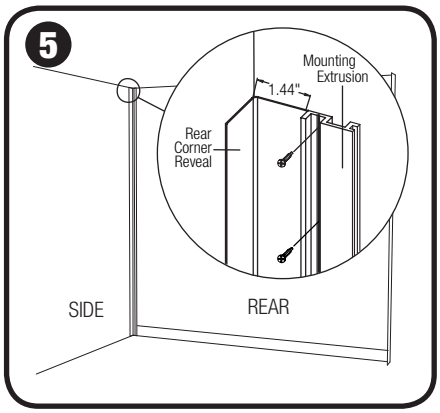

Install (1) Mounting Extrusion on left side of rear wall.

Position Mounting Extrusion 1.44" away from cab shell corner, at same height as the corner reveal strips. **Be sure the mounting extrusion is square relative to the base.** Attach using provided self-drilling screws. Install (1) Mounting Extrusion per side wall in back corners in the same fashion.

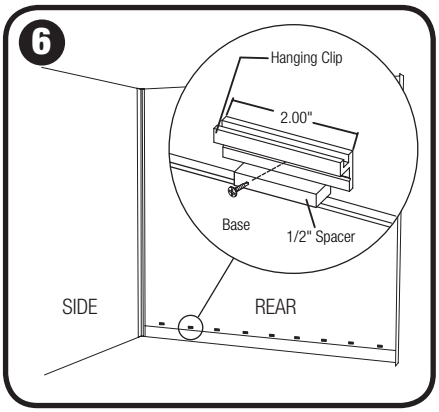

Install Hanging Clips.

Bottom panels require the installation of Hanging Clips. Panels up to 2 feet in width require 2 evenly spaced hanging clips per panel. For panels ranging from 2 to 4 feet, use 3 clips. For panels over 4 feet, use 4 clips. Use the 1/2" thick spacers provided to create a uniform 1/2" gap between base and Hanging Clip.

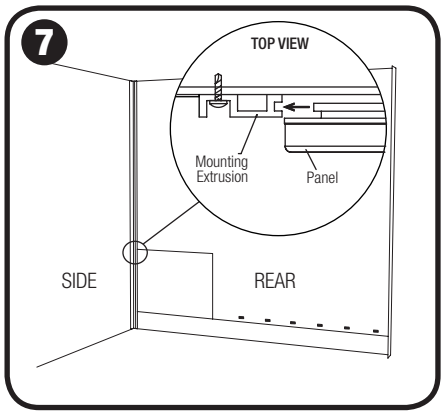

Install 1st Lower Panel.

Remove debris from Mounting Extrusion and Hanging Clips with brush prior to installation. The first panel will engage into the vertical Mounting Extrusion and rest on the Hanging Clips, positioning the panel above the base. **It is important that lower panels are installed straight and level, and engage fully with the mounting extrusion.** Note: Detail is top view.

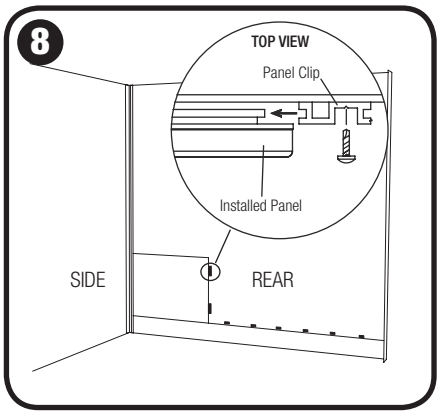

Install side Panel Clips.

Attach the clips as shown, using the provided self-drilling screws. One panel clip should be installed every 12-18" for proper alignment. Note: Detail is top view.

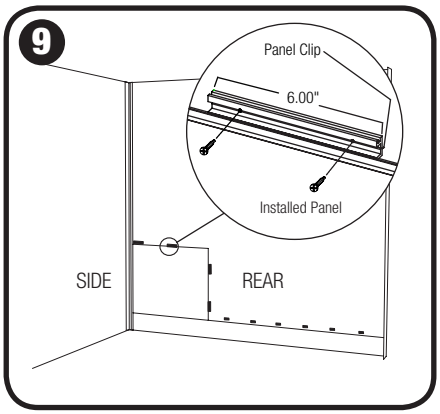

Install top Panel Clips.

Attach the clips as shown, using the provided self-drilling screws. One panel clip should be installed every 12-18" for proper alignment.

T 1.800.451.0410 | F 412.781.7840 | www.forms-surfaces.com

FORMS+SURFACES®

© 2012 Forms+Surfaces® | All dimensions are nominal. Specifications and pricing subject to change without notice. For the most current version of this document, please refer to our website at www.forms-surfaces.com.

LEVELe® ELEVATOR INTERIORS

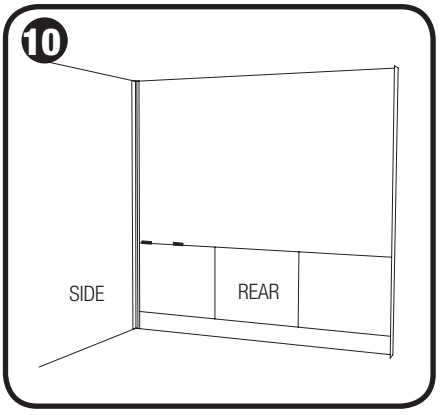

Install next Panel in sequence.

Using the installation sequence document provided with your elevator interiors, install panels in the order indicated using the method described in steps 7-9. **Panels must engage fully with Hanging Clips and Panel Clips. Debris in the Hanging Clips, Mounting Extrusion or Panel Clips will prevent the panel from engaging fully.**

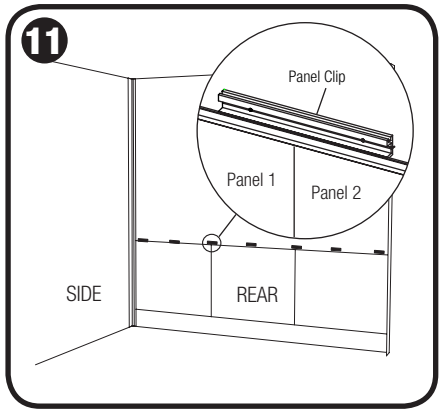

Repeat steps 8-10 as required.

No side Panel Clips are installed for last panel of row. **At any point where two panels meet, Panel Clips should cross over both panels, as seen above, to ensure ideal panel alignment.**

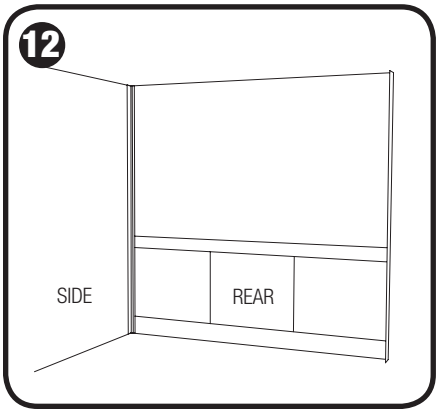

Install Handrail Panel.

Configurations with a handrail panel come with handrails factory installed on a single panel. For configurations in which handrails must span multiple panels, install shoulder bolts prior to installing panels. Once all panels are installed, slide handrail onto shoulder bolts and tighten set screws with provided allen key.

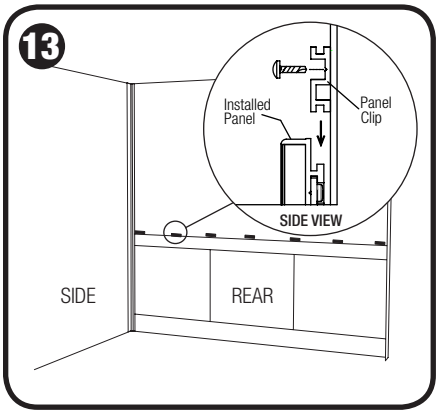

Install top Panel Clips.

Attach the clips as shown, using the provided self-drilling screws. One panel clip should be installed every 12-18" for proper alignment. Note: Detail is side view.

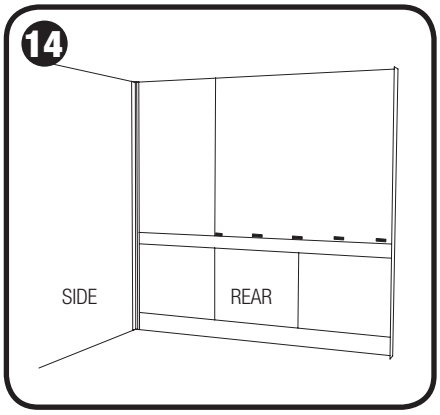

Install 1st Upper Panel.

Rest the first upper panel on the Panel Clips to position the first upper panel over the Handrail Panel. Refer to step 7 for detail.

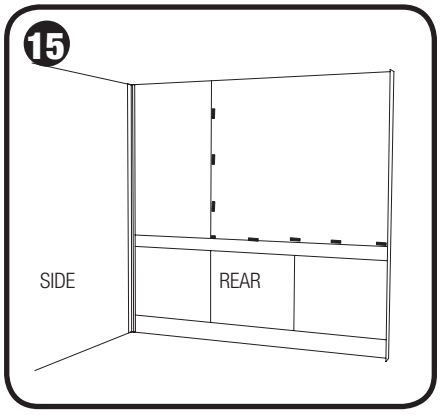

Install side Panel Clips.

Attach the clips as shown, using the provided self-drilling screws. See step 8 for detail. One panel clip should be installed every 12-18" for proper alignment.

T 1.800.451.0410 | F 412.781.7840 | www.forms-surfaces.com

FORMS+SURFACES®

© 2012 Forms+Surfaces® | All dimensions are nominal. Specifications and pricing subject to change without notice. For the most current version of this document, please refer to our website at www.forms-surfaces.com.

LEVELe® ELEVATOR INTERIORS

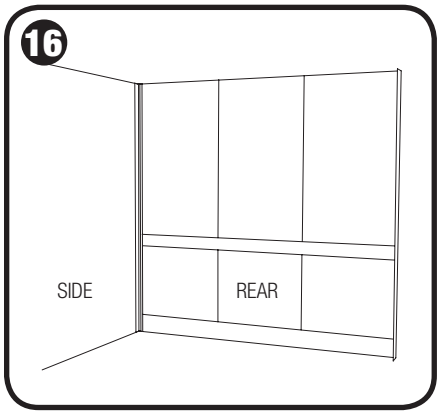

Repeat steps 12-13 as required.

No side Panel Clips are installed for last panel in row.

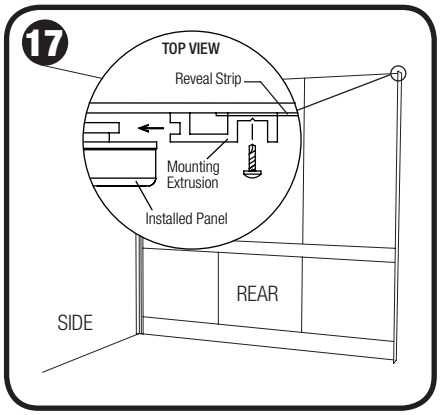

Install (1) Mounting Extrusion on remaining side of rear wall.

Position Mounting Extrusion and attach using provided self-drilling screws. Note: Detail is top view. **Mounting Extrusion must engage fully with panels.**

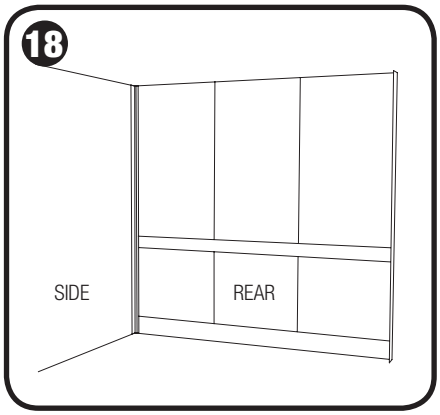

Repeat steps 5-17 for remaining walls.

Install all panels for remaining walls as indicated in previous steps.

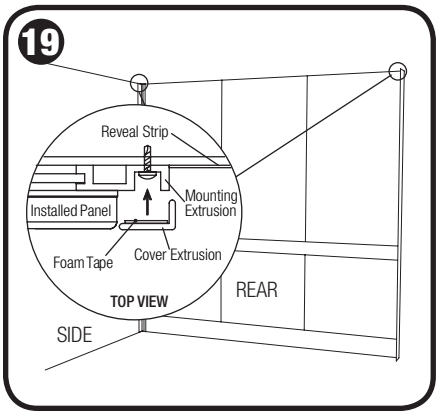

Install (2) Cover Extrusions on each wall.

Complete the installation by covering the screws with the Cover Extrusion provided. The Cover Extrusion is backed with factory supplied foam tape. Note: Detail is top view.

T 1.800.451.0410 | F 412.781.7840 | www.forms-surfaces.com

FORMS+SURFACES®

© 2012 Forms+Surfaces® | All dimensions are nominal. Specifications and pricing subject to change without notice. For the most current version of this document, please refer to our website at www.forms-surfaces.com.