TANGENT™ RAIL SEATING

CAST-IN-PLACE INSTALLATION INSTRUCTIONS

TOOLS NEEDED

tape measure

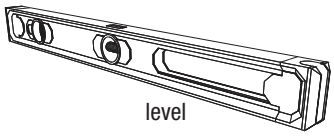

level

7/32" hex bit for tamper-resistant screws

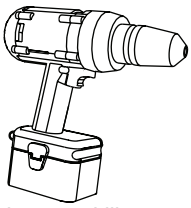

hammer drill

STEP BY STEP

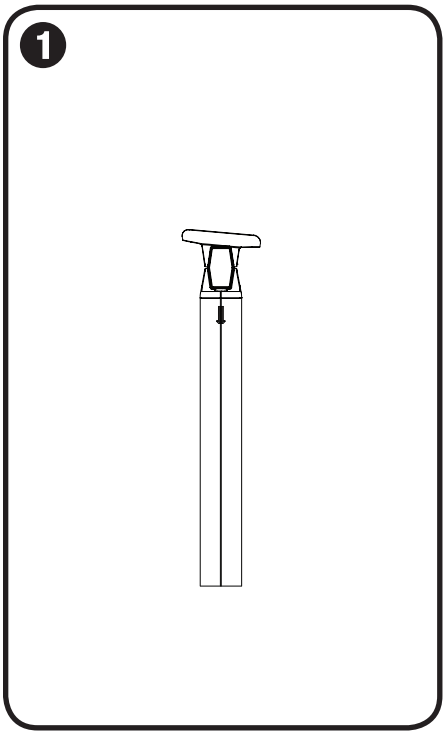

Attach legs to rail

- Line holes in leg connection castings up with holes in rail and insert provided screws.
- When placing rail, note that the back of the leg is indented, and the front of the leg is flat.
- Thread into holes and tighten using provided 7/32" hex bit for tamper-resistant screws.

  NOTE: Rail seating is not freestanding and must be supported during this step.

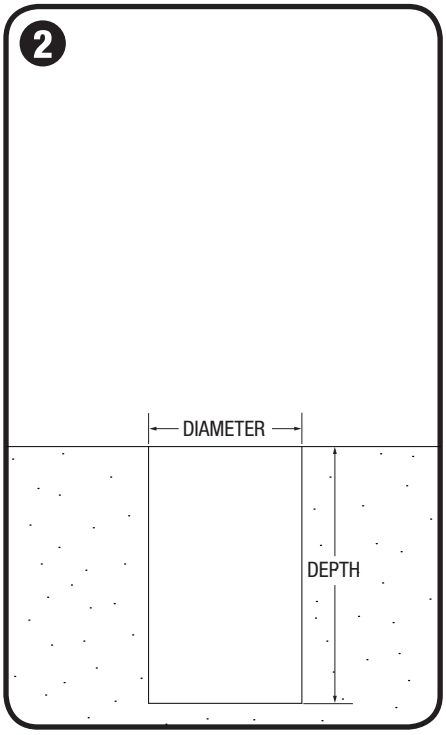

Create spaces for footers

- A sufficient footer size depends on frost and other conditions to be determined by the installer. A minimum of a 12" diameter x 20" deep footer per leg support is recommended.

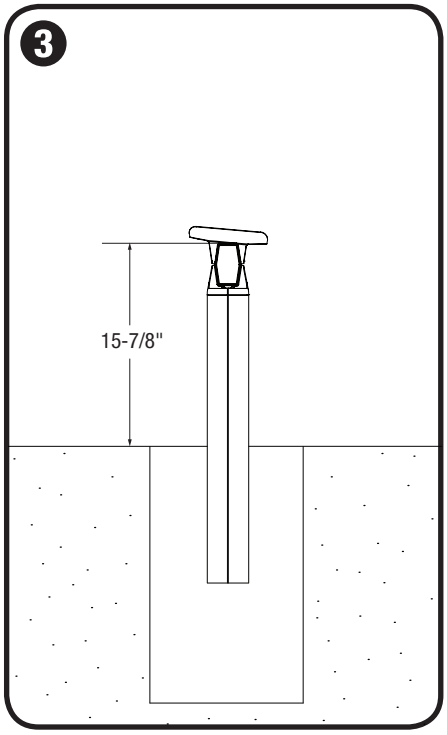

Position and support rail & legs

- Position rail seating in desired final location and support unit so concrete can be poured in hole around each leg support.
- The recommended height from ground level to the top of the rail extrusion is 15-7/8".
- Use level to ensure rail & leg supports are level.

  NOTE: When placing rail, note that the seat connect bracket is angled downward toward the rear of the bench.

T 800.451.0410 | www.forms-surfaces.com

FORMS+SURFACES®

© 2012 Forms+Surfaces® | All dimensions are nominal. Specifications and pricing subject to change without notice. For the most current version of this document, please refer to our website at www.forms-surfaces.com.

TANGENT™ RAIL SEATING

CAST-IN-PLACE INSTALLATION INSTRUCTIONS

STEP BY STEP

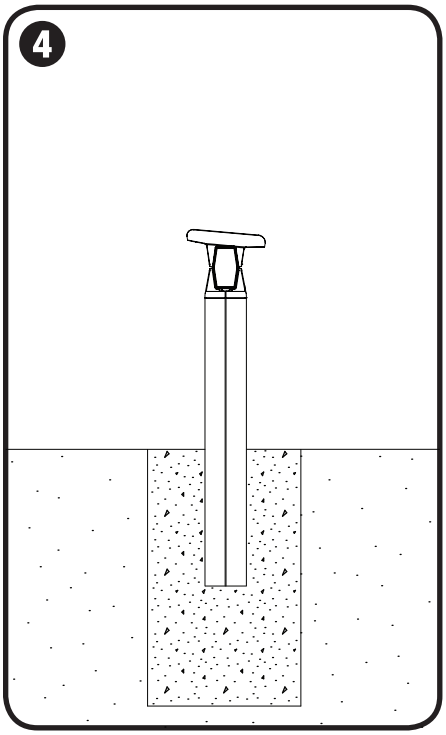

Pour concrete footer

- Mix concrete and pour footer according to concrete manufacturer's instructions.
- As soon as the footer is poured, re-measure to verify height and level.
- Allow concrete to cure completely according to concrete manufacturer's instructions before removing any temporary supports.

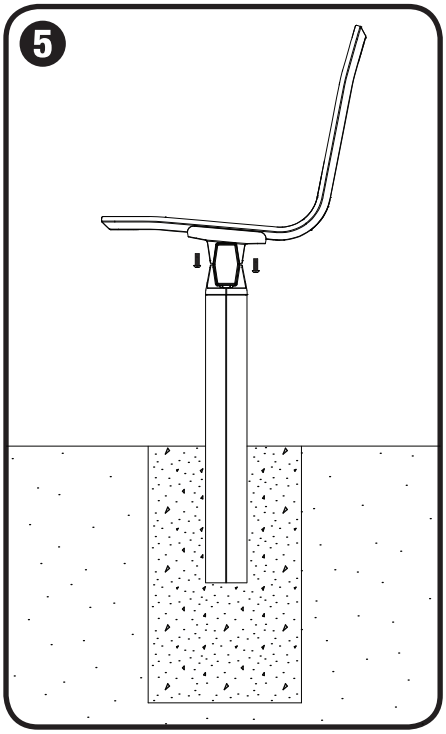

Attach seats & armrests to rail

- Line holes in seats and armrests up with holes in connection castings (already attached to rail) and insert provided screws.
- Thread into holes and tighten using provided 7/32" hex bit for tamper-resistant screws.

  NOTE: Seats and armrests must be supported during this step until all screws are tightened.

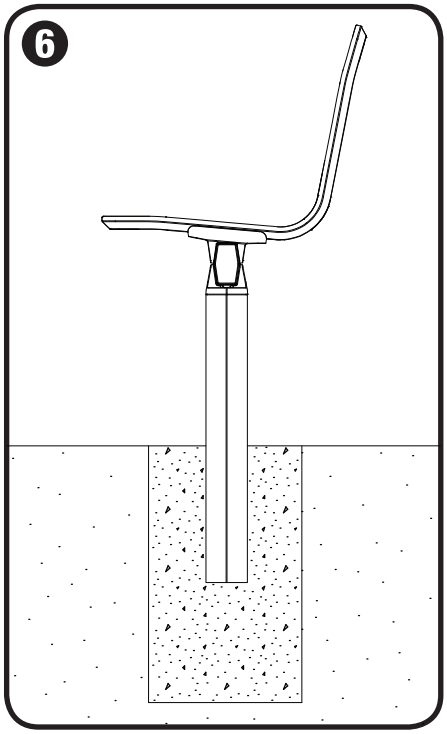

Tighten all screws

- Tighten all screws until snug.

© 2012 Forms+Surfaces® | All dimensions are nominal. Specifications and pricing subject to change without notice. For the most current version of this document, please refer to our website at www.forms-surfaces.com.