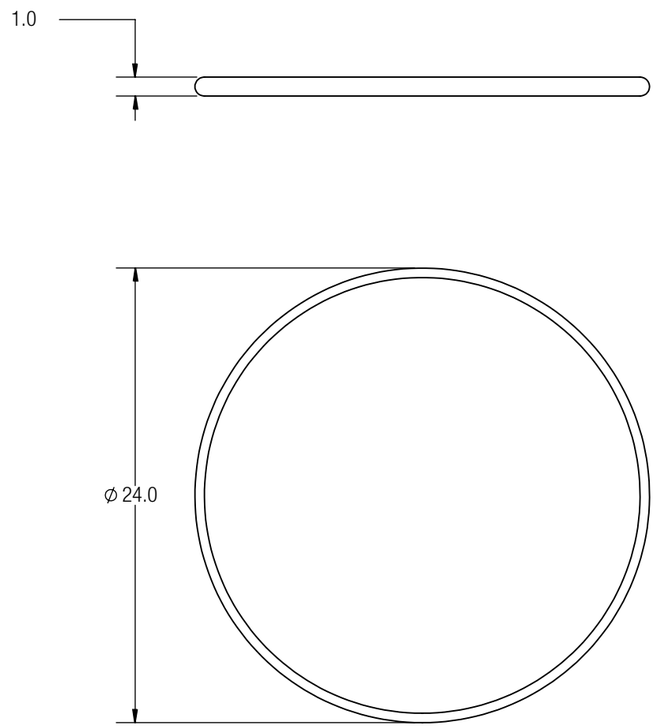

NO PERF

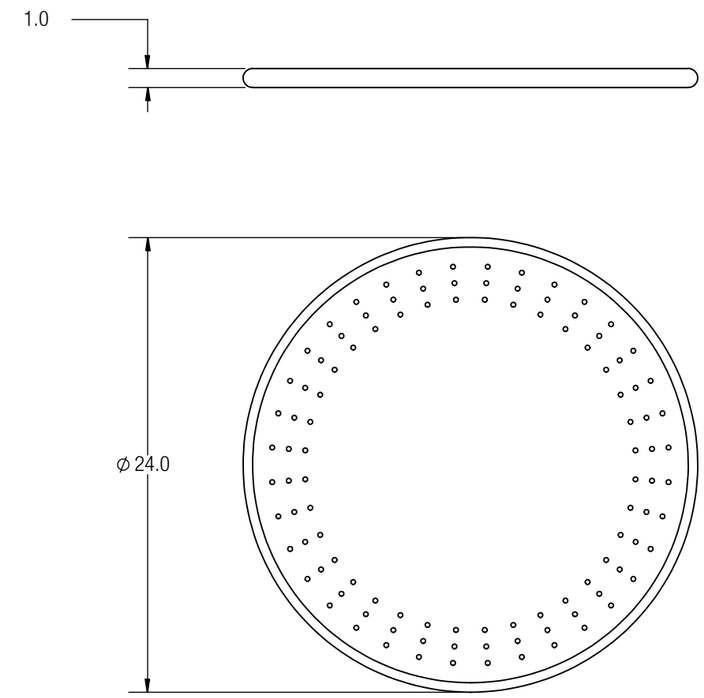

PERF

CUSTOMER APPROVAL:

X_____

DATE:

X_____

UNLESS OTHERWISE SPECIFIED, DIMENSIONS ARE IN INCHES

TOLERANCES (UNLESS OTHERWISE SPECIFIED):
FRACTIONAL: ±1/32
ANGULAR/BEND: ±1°°
TWO PLACE DECIMAL ±.030
THREE PLACE DECIMAL ±.020

MATERIAL: SEE DATA SHEET

FINISH: SEE DATA SHEET

WEIGHT: 9 LBS

SOURCE: S

SCALE: N.T.S.

FORMS+SURFACES®
30 Pine Street, Pittsburgh, PA 15223
Tel (800) 451-0410 Fax (412) 781-7840

		DATE
		01/01/2011

DO NOT SCALE DRAWING

PROPRIETARY AND CONFIDENTIAL

THE INFORMATION CONTAINED IN THIS DRAWING IS THE SOLE PROPERTY OF FORMS + SURFACES . ANY REPRODUCTION IN PART OR AS A WHOLE WITHOUT WRITTEN PERMISSION IS PROHIBITED.

COLUMN TABLE
BAR HEIGHT
(STAINLESS STEEL TABLE TOP - 24" ROUND ONLY)
STRSS-24

SIZE	DWG. NO.	REV	SHEET
B	SPCOL-B10R24-TD	0	1 OF 2

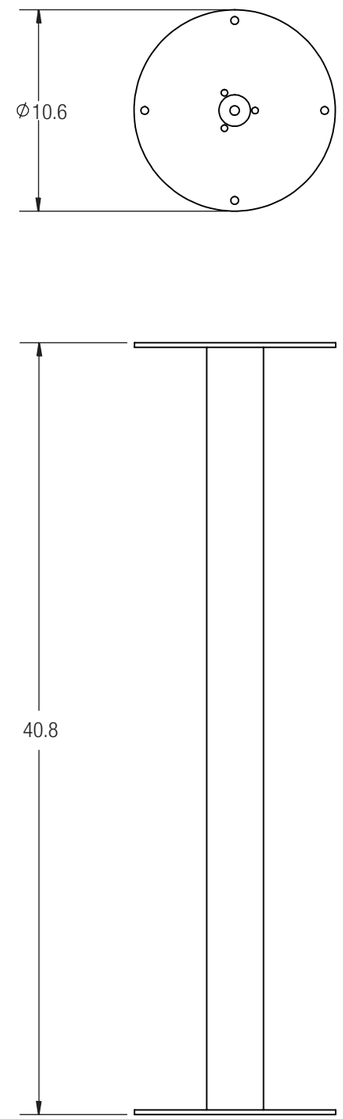

CUSTOMER APPROVAL:

X_____

DATE:

X_____

UNLESS OTHERWISE SPECIFIED, DIMENSIONS ARE IN INCHES

TOLERANCES (UNLESS OTHERWISE SPECIFIED):
FRACTIONAL: ±1/32
ANGULAR/BEND: ±1°
TWO PLACE DECIMAL ±.030
THREE PLACE DECIMAL ±.020

MATERIAL: SEE DATA SHEET

FINISH: SEE DATA SHEET

WEIGHT: 22 LBS

SOURCE: M

SCALE: N.T.S.

FORMS+SURFACES®
30 Pine Street, Pittsburgh, PA 15223
Tel (800) 451-0410 Fax (412) 781-7840

		DATE
		01/01/2011

DO NOT SCALE DRAWING

PROPRIETARY AND CONFIDENTIAL

THE INFORMATION CONTAINED IN THIS DRAWING IS THE SOLE PROPERTY OF FORMS + SURFACES . ANY REPRODUCTION IN PART OR AS A WHOLE WITHOUT WRITTEN PERMISSION IS PROHIBITED.

COLUMN TABLE -
BAR HEIGHT
(10" BASE & COLUMN ONLY)

SIZE	DWG. NO.	REV	SHEET
B	SPCOL-B10R24-TD	0	2 OF 2